WIPCOOL®

TWÓJ KLUCZ DO KOMFORTU

OPERATING MANUAL · ENGLISH

S1

Vacuum Pumps

Read this manual before use. Keep it with the unit for its entire service life.



Read the manual
Safety and connection rules before the first start-up.

Service and warranty
Service requests and warranty terms at wipcool.eu.

Documents online
Manual, data sheet and declaration of conformity at wipcool.eu.

CONTENTS

How to use this manual

Find the chapter you need. The numbers on the right are the pages of this booklet.

01	Wipcool S1 / S1.5 / S2 user manual	3
02	General information	3
03	Symbols and conventions	3
04	Safety information	4
05	Technical specifications	5
06	Device diagram	5
07	Contents	6
08	Transport and storage	7
09	Applications	7
10	How to use	7
11	Maintenance	8
12	Troubleshooting	9
13	Waste electrical and electronic equipment	10
14	Service and documents	11

MEANING OF SYMBOLS



Separate collection of WEEE

Do not dispose of used equipment with household waste.



CE marking

Manufacturer's declaration of conformity with EU requirements.



Read the manual

Safety and operating rules before starting work.

Wipcool S1 / S1.5 / S2 user manual

The Wipcool S1, S1.5 and S2 are single-stage rotary vane vacuum pumps for evacuating sealed systems.

The user manual is an integral part of the product. Please read this manual carefully and follow all instructions closely.

General information

Wipcool products are designed for professional use by qualified air conditioning and refrigeration engineers. As the manufacturer, Wipcool specifies that our equipment should be operated only by suitably qualified and trained personnel.

- Observe all local safety regulations and general safety standards when using the Wipcool S1, S1.5 or S2 vacuum pump.
- The user manual should be kept near the device so that personnel can access it easily at any time.
- Before use, qualified personnel should read the user manual carefully and understand all the instructions it contains.
- The manufacturer accepts no liability for any damage resulting from improper use, failure to follow the user manual, lack of personnel qualifications or any unauthorised modifications to the device.
- The general terms and conditions of sale contained in the sales documents apply.

Symbols and conventions

Signs and markings used on the device and in the manual:

01

CE

Indicates that the product complies with the health, safety and environmental standards applicable in the European Union.

02 **RoHS** The product meets the requirements for restricting the use of hazardous substances.

03



Do not dispose of the pump with household waste.

04



Warning - read the text in the box next to the symbol.

05



Hazardous voltage - risk of electric shock.

06



Warning of flammable materials.

Safety information

WARNING

Do not draw in flammable, explosive or toxic gases. Do not use the pump in an atmosphere containing R32 or R600a.

WARNING

Do not use the pump in the rain. Water in the device can cause an electric shock.

WARNING

Do not draw in corrosive gases or gases that react chemically with oil.

- The temperature of the gas drawn in must not exceed 40 °C. Use the pump at an ambient temperature of 5–45 °C.

WARNING
Do not run the pump without oil or with too little oil.

Technical specifications

Parameter	S1	S1.5	S2
Power supply	230 V~ / 50–60 Hz	230 V~ / 50–60 Hz	230 V~ / 50–60 Hz
Number of stages	1	1	1
Ultimate vacuum	150 microns (0.2 mbar)	150 microns (0.2 mbar)	150 microns (0.2 mbar)
Power	190 W	190 W	250 W
Maximum flow rate	57 l/min	85 l/min	113 l/min
Oil capacity	230 ml	210 ml	200 ml
Inlet connection	1/4" SAE	1/4" SAE	1/4" SAE
Operating temperature	5–45 °C	5–45 °C	5–45 °C
Maximum inlet gas temperature	40 °C	40 °C	40 °C
Dimensions (L × W × H)	266 × 121 × 194 mm	266 × 121 × 194 mm	266 × 121 × 194 mm

Device diagram

The pump has a transparent oil reservoir and a built-in non-return valve. Protective features limit oil leakage when the pump is tilted and reduce oil splashing.

The oil filler cap is above the oil reservoir, and the drain screw is below it.

Dimensions

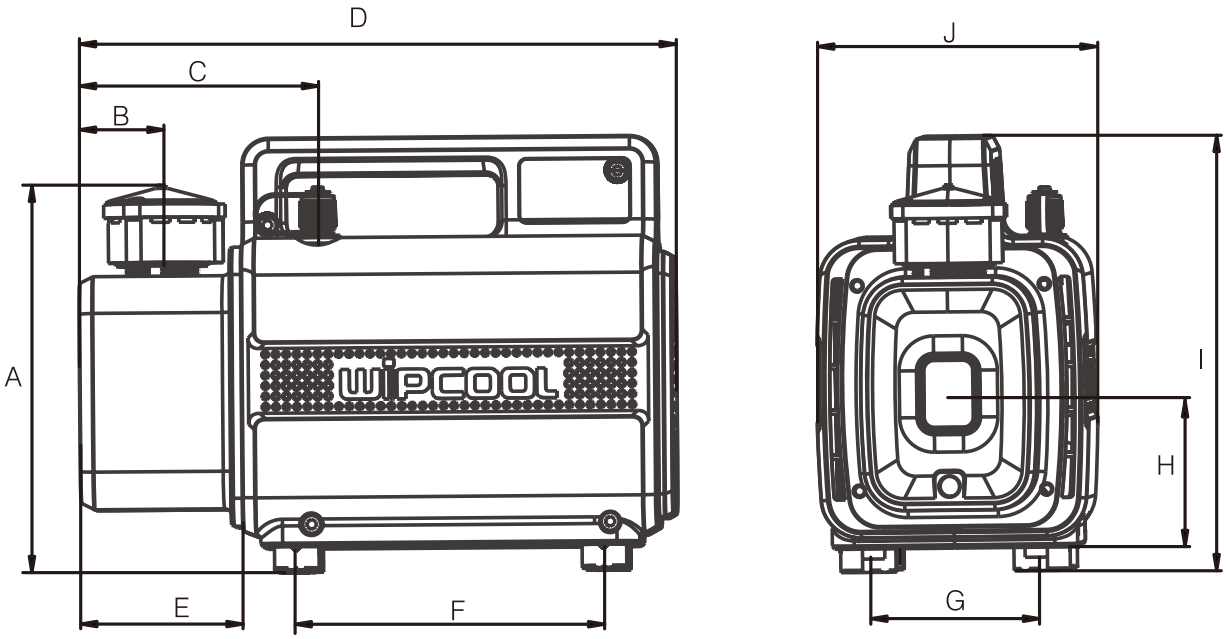

Figure 1. Dimensions of the S1, S1.5 and S2 pumps. Dimensions in millimetres.

Label	Dimension	Label	Dimension
A	145 mm	F	138 mm
B	36 mm	G	70 mm
C	107 mm	H	69 mm
D	266 mm	I	194 mm
E	73 mm	J	121 mm

Contents

- Vacuum pump.
- Vacuum pump oil.
- User manual.

A vacuum hose is not included.

After unpacking, check that all items are present and in good condition. Report any missing items, damage or oil leaks in the packaging to the seller.

Transport and storage

- Transport the pump in its original packaging.
- Store the pump in a dry place, away from direct sunlight and heat sources.
- Store the pump at a temperature of -20 to +60 °C.

Applications

The pumps are intended for light servicing work involving the evacuation of refrigeration equipment, split system air conditioners, small refrigeration systems and vehicle air conditioning systems. The pumps can also be used in other high-vacuum systems, such as vacuum packaging, gas analysis, thermoplastic forming, printing equipment and medical equipment.

How to use

Before first use

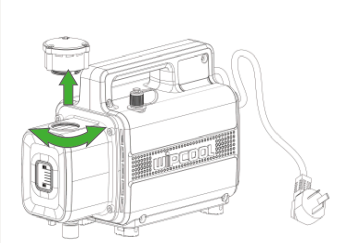

01 **Step 1**
Unscrew the oil filler cap. Figure 2. Unscrewing the oil filler cap.

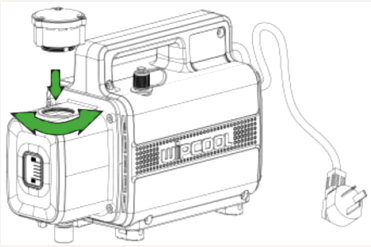

02 **Step 2**
Slowly pour in vacuum pump oil until the level reaches halfway up the oil sight glass, then screw in the oil filler cap. Figure 3. Filling with oil.

Topping up the oil

If the oil level is below halfway up the oil sight glass, top up the oil as for the initial fill (steps 1–2 above). Disconnect the pump from the power supply before unscrewing the oil filler cap.

Starting the pump

Before each use, check the condition of the pump and accessories and the oil level. If necessary, top up the oil according to the ‘Topping up the oil’ section above.

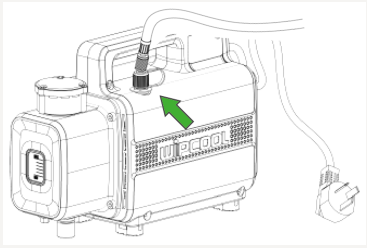

01 **Step 1**
Connect a vacuum hose to the pump inlet connection and to the system. Figure 4. Connecting the hose to the inlet connection.

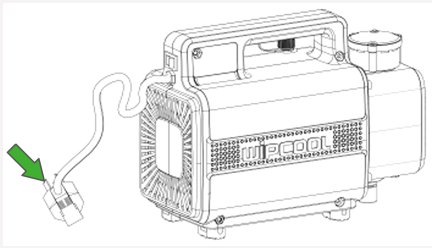

02 **Step 2**
Connect the pump to the power supply and start it using the switch. Figure 5. Connecting the power supply and the pump switch.

Maintenance

General recommendations

Change the oil when it turns black, becomes cloudy (emulsified) or is contaminated.

> **WARNING**
> Disconnect the pump from the power supply before draining the oil or unscrewing parts.

Changing the oil

01 Unscrew the drain screw beneath the oil reservoir and drain the oil. Then tighten the drain screw.

02 Unscrew the oil filler cap and slowly pour in fresh vacuum pump oil. The built-in oil leak protection limits the filling rate.

03 Connect the pump to the power supply and start it using the switch. Check that the oil level has stabilised halfway up the oil sight glass.

04 Switch off the pump and disconnect it from the power supply. Screw in the oil filler cap.

Troubleshooting

Problem	Possible cause	Solution
Insufficient vacuum	Insufficient oil	Top up the oil to halfway up the oil sight glass.
Insufficient vacuum	Oil is emulsified or contaminated	Change the oil.
Insufficient vacuum	Blocked oil inlet or insufficient oil supply	Have the pump repaired by the service team - submit a service request at wipcool.pl/serwis.
Insufficient vacuum	Leaking hoses or leaks in the system being evacuated	Check the hoses and system for leaks; repair any leaks.
Insufficient vacuum	Incorrectly selected pump, e.g. too small	Select a pump suited to the size of the system being evacuated.
Insufficient vacuum	Worn parts, increased clearances or a leaking line inside the pump	Have the pump repaired by the service team - submit a service request at wipcool.pl/serwis.
Insufficient vacuum	Contamination on the sealing surface of the oil filler cap	Check for and remove any contamination.
Oil leaks	Worn shaft seal	Have the pump repaired by the service team - submit a service request at wipcool.pl/serwis.
Oil leaks	Loose or damaged oil reservoir connection	Have the pump repaired by the service team - submit a service request at wipcool.pl/serwis.

Problem	Possible cause	Solution
Difficult starting	Low oil temperature	Start the pump with the inlet connection open to the atmosphere and leave it running until the oil warms up.
Difficult starting	Motor or power supply problem	Check the power supply. If it is working correctly, stop work. Have the pump repaired by the service team - submit a service request at wipcool.pl/serwis.
Difficult starting	Contamination inside the pump	Have the pump repaired by the service team - submit a service request at wipcool.pl/serwis.
Pump does not start or stops suddenly	Motor or power supply problem	Check the power supply. If it is working correctly, stop work. Have the pump repaired by the service team - submit a service request at wipcool.pl/serwis.

Waste electrical and electronic equipment

01



The crossed-out bin symbol means that the device must not be disposed of with other waste at the end of its life.

Under applicable regulations on waste electrical and electronic equipment, products marked with the separate collection symbol must not be disposed of with other municipal waste. Because they contain hazardous substances, electronic products that are not collected separately may pose a risk to the environment and human health. Proper separate collection of waste electrical and electronic equipment prevents adverse effects on the environment.

By taking waste equipment to a collection point, the user contributes to its reuse, recycling and recovery.

Recycling - one method of protecting the environment. The process of recovering substances from waste that can be reused as raw materials.

Waste recovery - the use of waste that has lost its useful value, such as plastics, paper and cardboard, as secondary raw materials; the term is also commonly used to mean the destruction of waste.

Information about the waste electrical and electronic equipment collection system

- Waste electrical and electronic equipment must not be disposed of together with other waste.
- The collection of incomplete electrical and electronic equipment and parts from waste equipment is prohibited.
- A distributor delivering equipment intended for households to a purchaser must collect household waste equipment free of charge at the place of delivery, provided that the waste equipment is of the same type and serves the same function as the equipment delivered.
- The user may hand over waste equipment to a waste equipment collector, a treatment facility or a municipal waste collector operating in the municipality.
- Information about collection points is available on the Public Information Bulletin (BIP) websites of the regional, city and municipal authorities.

Service and documents

Before submitting a service request, prepare:

- Model - shown on the device nameplate and on the invoice.
- Serial number - if there is none, provide the production number (e.g. 11/2025), usually found on the underside of the device.
- Proof of purchase - an invoice or receipt from an authorised distributor.
- Description of the fault - what is happening, since when and under what conditions.

You can submit a service request at wipcool.pl/serwis. You will also find the warranty terms there.

WIPCOOL®
TWÓJ KLUCZ DO KOMFORTU

SERVICE AND DOCUMENTS

S1 · Operating manual

EDITION DETAILS

Model	**S1**
Edition	**05.11.2026 · EN**
Manufacturer	**Zhejiang Wipcool Refrigeration Equipment Co., Ltd.**
Authorised representative	**4REF sp. z o.o., ul. gen. Władysława Andersa 38, 15-113 Białystok**

wipcool.eu

- online manual and other languages
- data sheet and declaration of conformity
- service and requests

CE

The CE marking confirms the declared conformity with EU requirements.
Crossed-out bin: do not dispose of used equipment with household waste.