wipcool®
TWÓJ KLUCZ DO KOMFORTU

OPERATING MANUAL · ENGLISH

P180

Condensate Pump

Read this manual before use. Keep it with the unit for its entire service life.



Read the manual
Safety and connection rules before the first start-up.

Service and warranty
Service requests and warranty terms at wipcool.eu.

Documents online
Manual, data sheet and declaration of conformity at wipcool.eu.

CONTENTS

How to use this manual

Find the chapter you need. The numbers on the right are the pages of this booklet.

01	Wipcool P180/P380/P580 user manual	3
02	General information	3
03	Symbols and conventions	3
04	Safety information	4
05	Technical specifications	4
06	Device diagram	6
07	Package contents	8
08	Transport and storage	8
09	Application	9
10	Installation	9
11	Connection	10
12	Operation	10
13	Maintenance	11
14	Troubleshooting	12
15	Waste electrical and electronic equipment	14
16	Service and documents	15

MEANING OF SYMBOLS



Separate collection of WEEE

Do not dispose of used equipment with household waste.



CE marking

Manufacturer's declaration of conformity with EU requirements.



Read the manual

Safety and operating rules before starting work.

Wipcool P180/P380/P580 user manual

The Wipcool P180, P380 and P580 pumps remove condensate from air conditioners and refrigeration equipment. They start automatically according to the condensate level in the tank.

The user manual is an integral part of the product. Please read this manual carefully and follow all instructions closely.

General information

Wipcool products are designed for professional use by qualified air conditioning and refrigeration engineers. As the manufacturer, Wipcool stipulates that our equipment should only be operated by suitably qualified and trained persons.

- Observe all local safety regulations and general safety standards when using the Wipcool P180/P380/P580 condensate pump.
- The user manual should be kept near the device so that personnel can access it easily at any time.
- Before use, qualified personnel should read the user manual carefully and understand all the instructions it contains.
- The manufacturer accepts no liability for any damage resulting from improper use, failure to follow the user manual, lack of personnel qualifications or any unauthorised modifications to the device.
- The general terms of sale set out in the sales documents apply.

Symbols and conventions

Symbols and markings used on the device and in the manual:

01



Dangerous voltage - risk of electric shock.

02



Notice - risk of damage to the device or incorrect operating results.

03

CE

Indicates that the product meets the health, safety and environmental standards applicable in the European Union.

04 **RoHS** The product meets the requirements for the restriction of hazardous substances.

05



Do not dispose of the device with household waste.

Safety information

WARNING
Disconnect the power supply to the pump and air conditioner before installation, maintenance or servicing.

- Do not install a damaged pump or use damaged cables.
- The pump is not waterproof. Do not install it outdoors or in a location exposed to flooding.
- Do not place electrical equipment or valuable items beneath the pump. A power failure or leak may damage them.
- Coil excess power cable so that it cannot be damaged during installation.
- Secure condensate pipe connections with clamps. Do not join multiple lengths of pipe together.

CAUTION
The condensate inflow must not exceed the pump's flow rate. Excessive inflow causes continuous operation and may damage the motor, while a sudden large inflow may cause an overflow.

Technical specifications

Parameter	P180	P380	P580
Power supply	230 V~ / 50–60 Hz	230 V~ / 50–60 Hz	230 V~ / 50–60 Hz
Maximum flow rate	280 l/h (50 Hz)	380 l/h	580 l/h

Parameter	P180	P380	P580
Max. head	5 m (50 Hz)	6.8 m	12 m
Tank capacity	1.8 l	1.8 l	1.8 l
Noise level at 1 m	48 dB(A)	28 dB(A)	60 dB(A)
Power consumption	60 W	20 W	85 W
Operating ambient temperature	5–50 °C	5–50 °C	5–50 °C
Storage temperature	5–50 °C	5–50 °C	5–50 °C
Device weight	2.5 kg	1 kg	1.6 kg
Dimensions (L × W × H)	270.5 × 148 × 171 mm	270.5 × 148 × 119 mm	270.5 × 148 × 171 mm

Performance

Vertical axis: head [m]. Horizontal axis: flow rate [l/h].

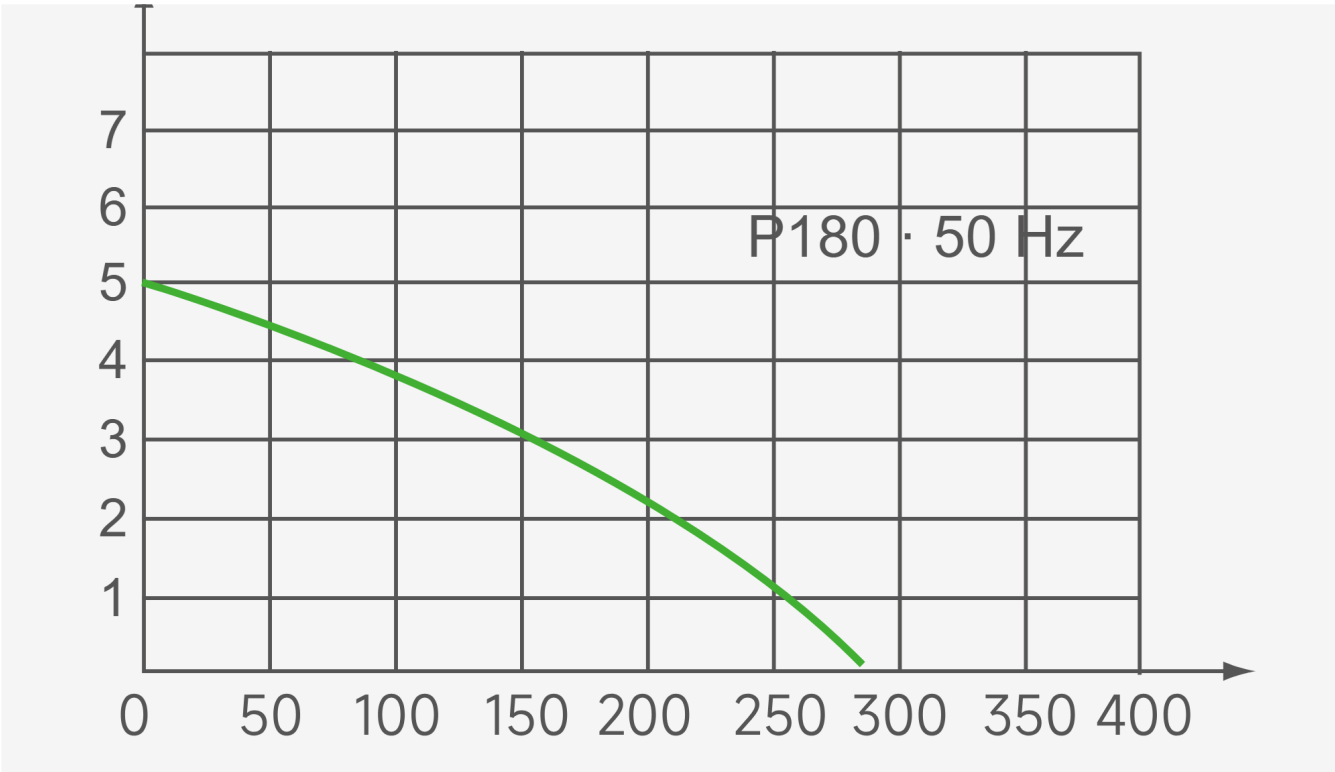

Figure 1. P180 performance curve at 50 Hz: maximum flow rate 280 l/h, max. head 5 m.

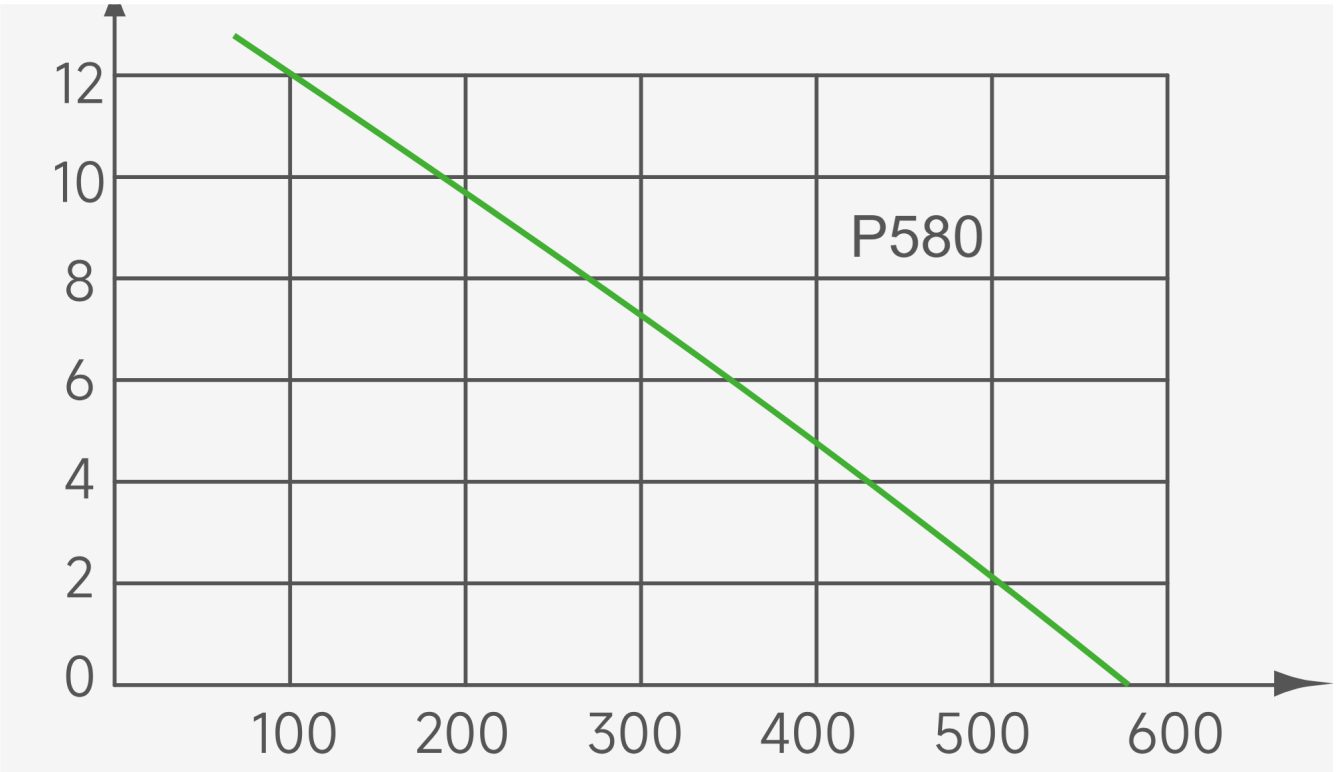

Figure 2. P580 performance curve: maximum flow rate 580 l/h, max. head 12 m.

Device diagram

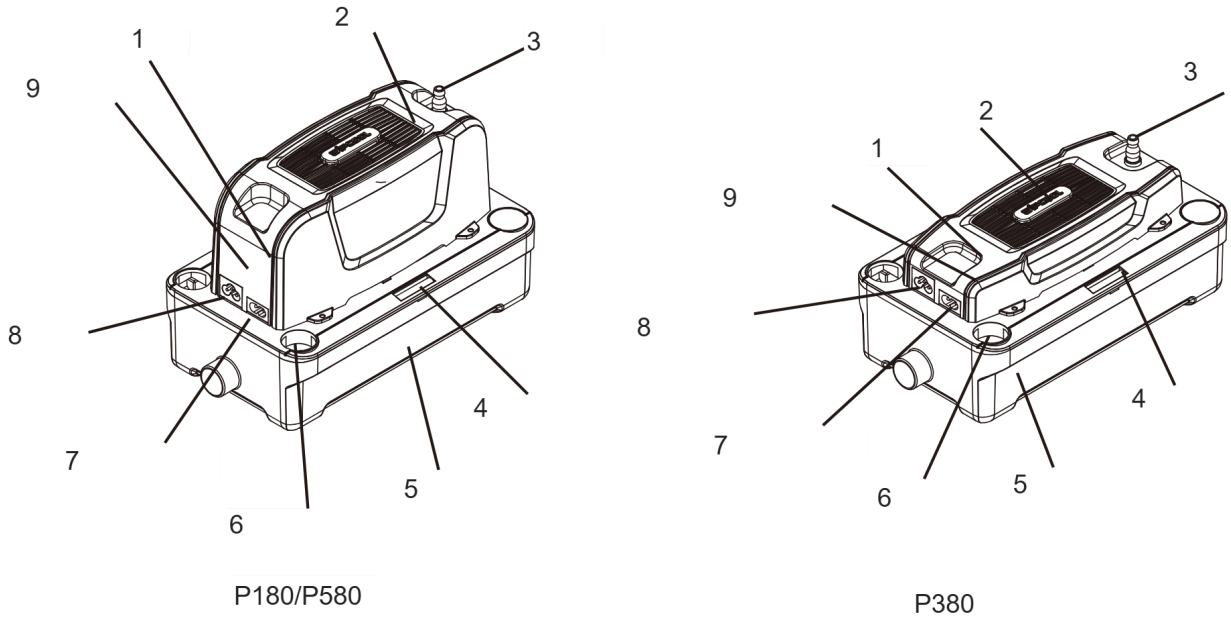

Figure 3. Components of the P180/P580 and P380 pumps.

Reference	Component
1	Alarm buzzer

Reference	Component
2	Motor
3	Discharge outlet
4	Spirit level
5	Tank
6	Condensate inlet
7	Signal cable
8	Power socket
9	Control board

The P180 and P380 have condensate level probes. The P580 has probes and an additional float switch. The alarm buzzer signals a high condensate level when the pump is not draining condensate properly.

Pump dimensions

Dimensions in the drawings are given in mm.

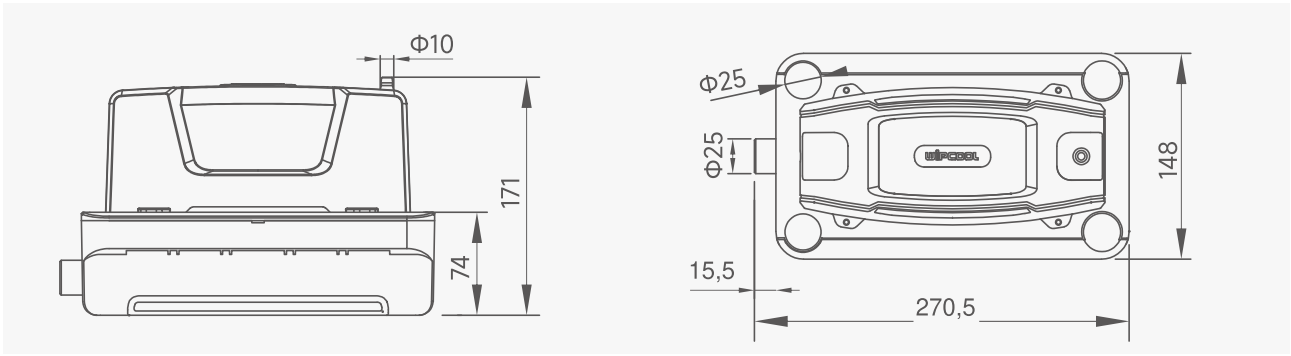

Figure 4. P180 dimensions.

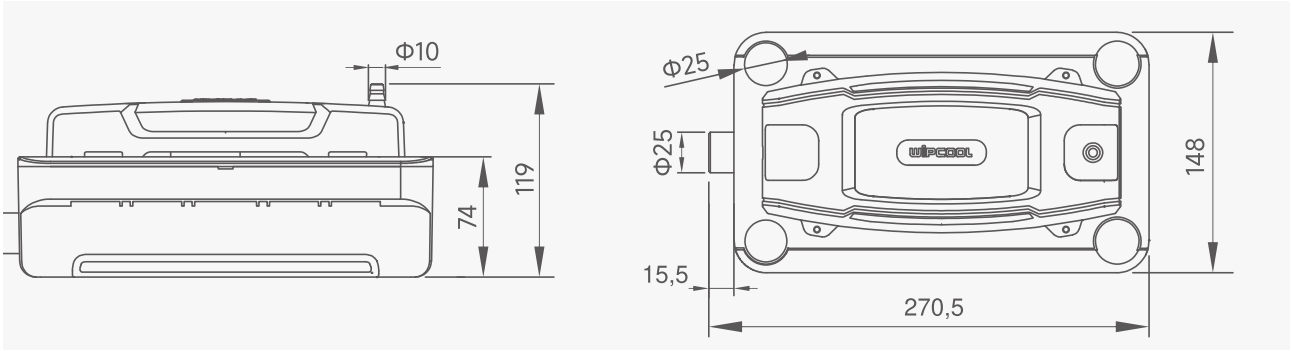

Figure 5. P380 dimensions.

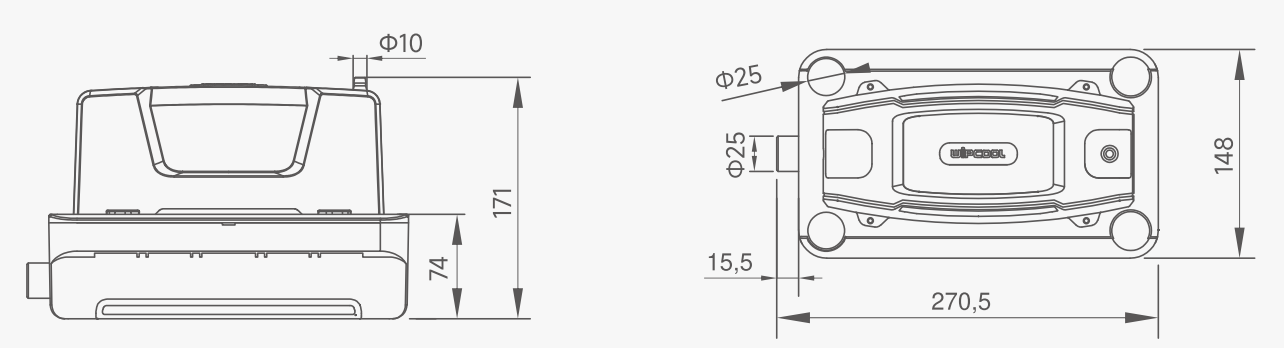

Figure 6. P580 dimensions.

Package contents

After unpacking, check that the set is complete and in good condition. Report any missing or damaged items to the seller.

- Condensate pump.
- Clamps - 2 pcs, length 10 cm.
- Wall plugs - 2 pcs.
- Mounting screws - 2 pcs.
- Mounting plate and clamping ring.
- Rubber reducer.
- Power cable.
- User manual.

Transport and storage

- Transport the pump in its original packaging. Protect it from movement, shocks, moisture, dust and extreme temperatures.
- Store the pump horizontally at 5–50 °C, in a dry, well-ventilated place, away from sunlight and heat sources.

Application

Select a pump to suit the condensate inflow, head and resistance of the installation. Measure the head from the discharge outlet to the highest point of the discharge pipe.

Installation

01 With the power supply disconnected, place the pump on a level surface or prepare a wall mounting. Do not rest it on the pipes or cables.

02 For wall mounting, secure the mounting plate horizontally, then fit the pump into its slot. Check that it is level using the spirit level; the bubble should be centred.

03 The pump has five condensate inlets. Insert the inlet pipe from the air conditioner into the selected condensate inlet; for a smaller-diameter pipe, use the rubber reducer supplied.

04 Route the inlet pipe with a downward gradient for gravity drainage and secure it so that it cannot come out. Leave unused condensate inlets closed.

05 Push a suitably sized discharge pipe onto the discharge outlet at the top of the pump and secure the connection with a clamp. Do not swap the inlet and outlet or kink or compress the pipe.

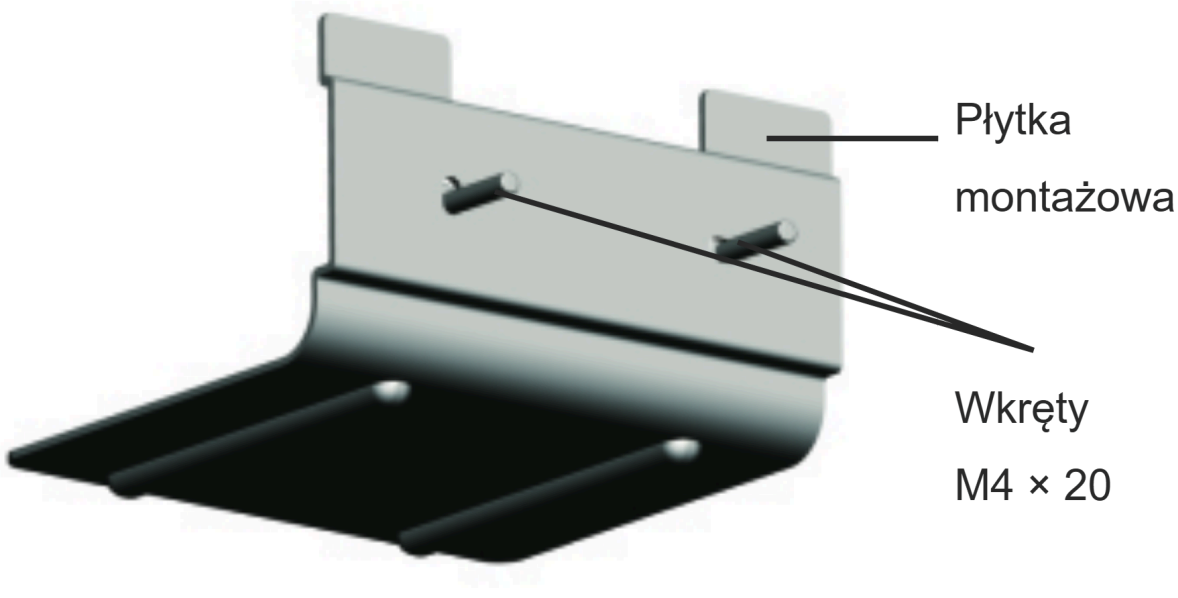

Figure 7. Mounting plate and screws.

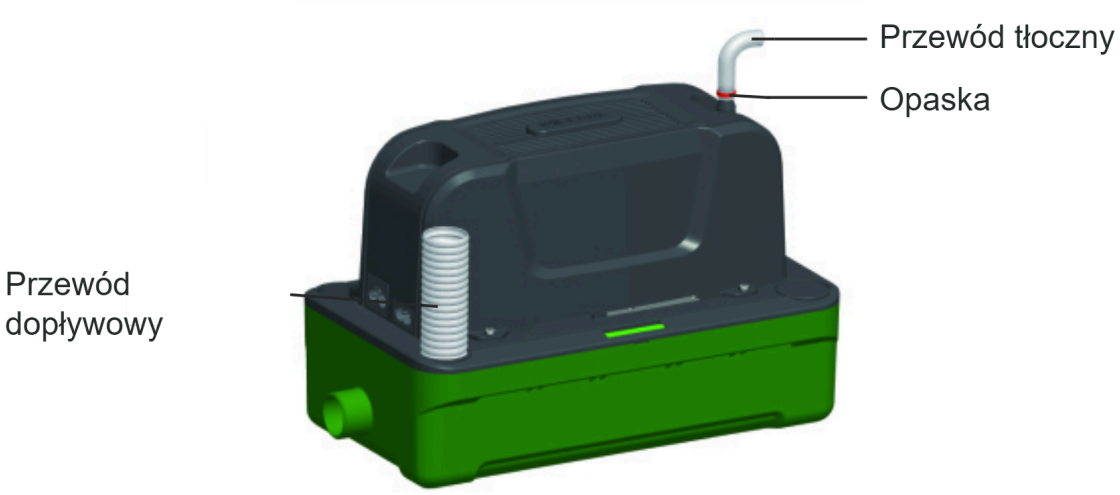

Figure 8. Inlet pipe, discharge pipe and clamp.

Connection

WARNING

Make the connections with the power supply disconnected.

CAUTION

Do not confuse the power cable with the signal cable - incorrect connection will damage the pump. Check that the voltage matches the rating plate.

The power cable (POWER) has three cores, and the signal cable has two cores.

Connect the power cable (POWER) to a circuit that remains live after the air conditioner is switched off or the alarm is triggered. The pump must be able to drain the remaining condensate.

It is recommended that the signal cable be connected to the air conditioner's alarm circuit, which will stop the air conditioner if the pump fails. The alarm buzzer alone does not switch off the air conditioner.

Operation

Check after installation

01 Once the pump is correctly connected, switch on its power supply and start the air conditioner.

02 When condensate enters the tank, the pump should start automatically, pump it out and switch off. At the same time, check the connections for leaks.

03 If the pump does not operate correctly, switch off the air conditioner and check the table in the ‘TROUBLESHOOTING’ section.

Maintenance

> **WARNING**
> Disconnect the power supply to the pump and air conditioner before inspection and cleaning.

General recommendations

Clean the tank, filter and accessible probe surfaces every six months (preferably in spring and autumn), or more often if they become dirty quickly. Do not allow water to come into contact with electrical components.

Use clean water and a mild cleaning agent, such as a small amount of soap. For seasonal cleaning, use an antibacterial agent that does not damage the pump's plastics. Do not use alcohol, petrol, solvents, corrosive substances or strong detergents. Before washing the air conditioner, disconnect the pump's power supply and protect it from chemicals entering it. Rinse any remaining cleaning agents thoroughly from the air conditioner before reconnecting the pump.

Cleaning the tank and filter

01 Disconnect the inlet and discharge pipes. Have a towel ready in case any remaining water spills.

02 Release the tank fastening and separate the tank from the rest of the pump, then remove the filter.

03 Remove deposits from the tank, filter and probe surfaces accessible after removing the tank. Rinse the tank with clean water.

04 Refit the removed components and connect the pipes. After restoring power, check operation and check for leaks.

Cleaning the discharge outlet

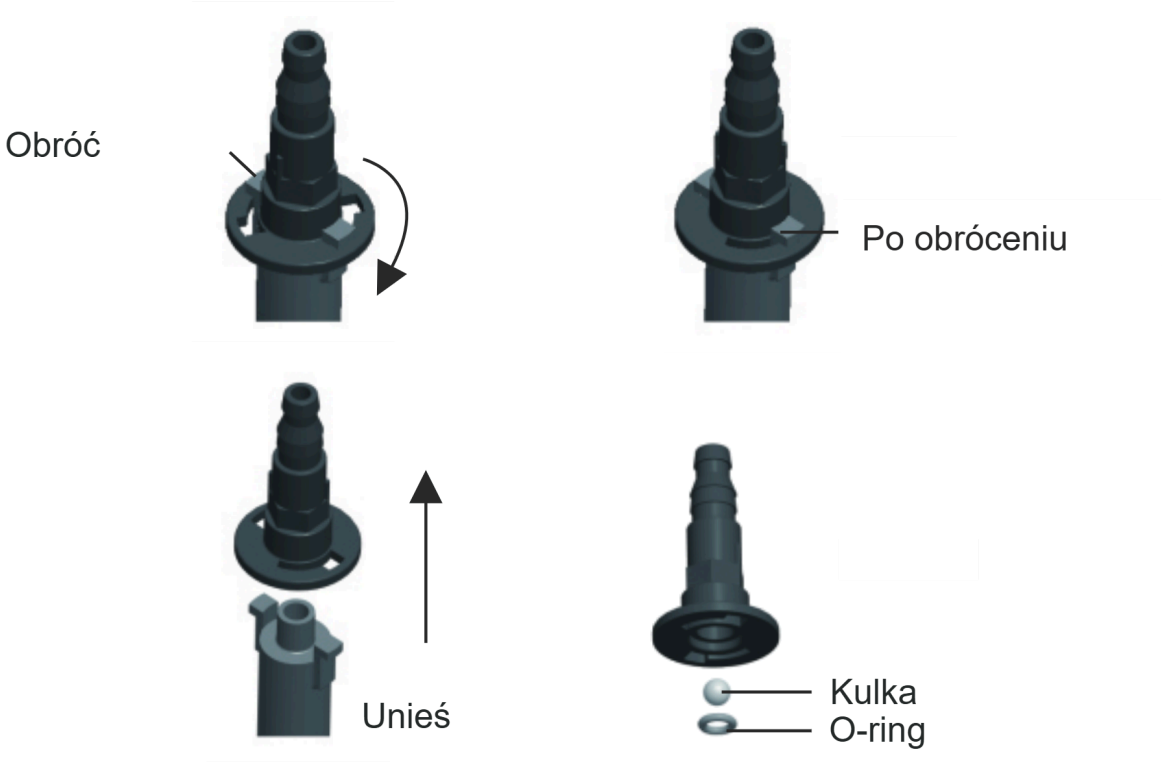

Figure 9. Removing the discharge outlet, ball and O-ring seal.

01 Disconnect the discharge pipe from the discharge outlet.

02 Turn the discharge outlet to the release position and lift it (Figure 9). Do not lose the ball and O-ring seal.

03 Remove any debris, then reassemble all components and fit the discharge outlet. Check that it is secure and connect the discharge pipe.

04 Connect the power supply, check the drainage and check the connection for leaks.

Troubleshooting

WARNING
Disconnect the power supply to the pump and air conditioner before checking connections, disconnecting pipes or cables, and cleaning.

Problem	Possible cause	Solution
Pump runs continuously	Pump is not level	Level the pump.

Problem	Possible cause	Solution
Pump runs continuously	Deposits in the tank	Clean the tank and accessible probe surfaces as described in the ‘MAINTENANCE’ section.
Pump does not start	Pump is not level	Level the pump.
Pump does not start	No power supply	Check the power supply connection.
Pump does not start	Incorrect voltage	Check that the power supply matches the rating plate.
Pump does not start	Incorrect cable connection	Check the power cable connections.
Pump runs but does not drain condensate	Blocked condensate inlet or discharge outlet	Check and clean the condensate inlet and discharge outlet.
Pump runs but does not drain condensate	Pump is not level	Level the pump.
Condensate leaks	Damaged discharge pipe	Check the pipe and replace it if damaged.
Condensate leaks	Incorrect pipe connection	Correct the connection and secure it with a clamp.
Noisy pump operation	Damage to internal components	Have the pump repaired by the service centre - submit a request at wipcool.pl/serwis.
Pump gurgles or makes noise after switching off	The end of the discharge pipe is lower than the pump, creating a siphoning effect	Route the pipe so that its end is higher than the pump.
Pump switches on and off too frequently	Excessive condensate inflow	Check the discharge pipe for blockages and check the condensate drainage.
Pump switches on and off too frequently	Deposits in the tank	Clean the tank and accessible probe surfaces as described in the ‘MAINTENANCE’ section.
Pump switches on and off too frequently	Pump is not level	Level the pump.
Alarm activates	Condensate level is too high	Switch off the air conditioner. Check the discharge outlet and discharge pipe for blockages.
Alarm activates	Incorrect signal cable connection	Check the signal cable connections.

If the alarm continues to activate after checking for blockages, switch off the air conditioner. Have the pump repaired by the service centre - submit a request at wipcool.pl/serwis.

Waste electrical and electronic equipment

01



The crossed-out bin symbol means that the end-of-life device must not be disposed of with other waste.

Under the applicable regulations on waste electrical and electronic equipment, products marked with the separate collection symbol must not be disposed of with other municipal waste. Because they contain harmful substances, electronic products that are not collected separately may pose a risk to the environment and human health. Proper separate collection of waste electrical and electronic equipment prevents adverse effects on the environment.

By taking end-of-life equipment to a collection point, the user contributes to its reuse, recycling and recovery.

Recycling - a method of protecting the environment. The process of recovering substances from waste so that they can be reused as raw materials.

Waste recovery - the use of waste that has lost its useful value, such as plastics, paper and cardboard, as secondary raw materials; the term is also commonly used to mean destruction of waste.

Information on the collection system for waste electrical and electronic equipment

- Waste electrical and electronic equipment must not be disposed of with other waste.
- The collection of incomplete electrical and electronic equipment and parts from end-of-life equipment is prohibited.
- A distributor delivering equipment intended for households to a purchaser must collect waste household equipment free of charge at the place of delivery, provided that the waste equipment is of the same type and performs the same function as the equipment delivered.
- The user may hand over waste equipment to a waste equipment collector, a treatment facility or a municipal waste collector in the municipality.
- Information about collection points is available on the Public Information Bulletin (BIP) websites of regional, city and municipal offices.

Service and documents

Before submitting a request, prepare:

- Model - shown on the device rating plate and on the invoice.
- Serial number - if there is none, provide the production number (e.g. 11/2025), usually found on the underside of the device.
- Proof of purchase - an invoice or receipt from an authorised distributor.
- Description of the fault - what is happening, since when and under what conditions.

You can submit a service request at wipcool.pl/serwis. You will also find the warranty terms there.

WIPCOOL®
TWÓJ KLUCZ DO KOMFORTU

SERVICE AND DOCUMENTS

P180 · Operating manual

EDITION DETAILS

Model	**P180**
Edition	**05.11.2026 · EN**
Manufacturer	**Zhejiang Wipcool Refrigeration Equipment Co., Ltd.**
Authorised representative	**4REF sp. z o.o., ul. gen. Władysława Andersa 38, 15-113 Białystok**

wipcool.eu

- online manual and other languages
- data sheet and declaration of conformity
- service and requests

CE

The CE marking confirms the declared conformity with EU requirements.
Crossed-out bin: do not dispose of used equipment with household waste.